Part No.

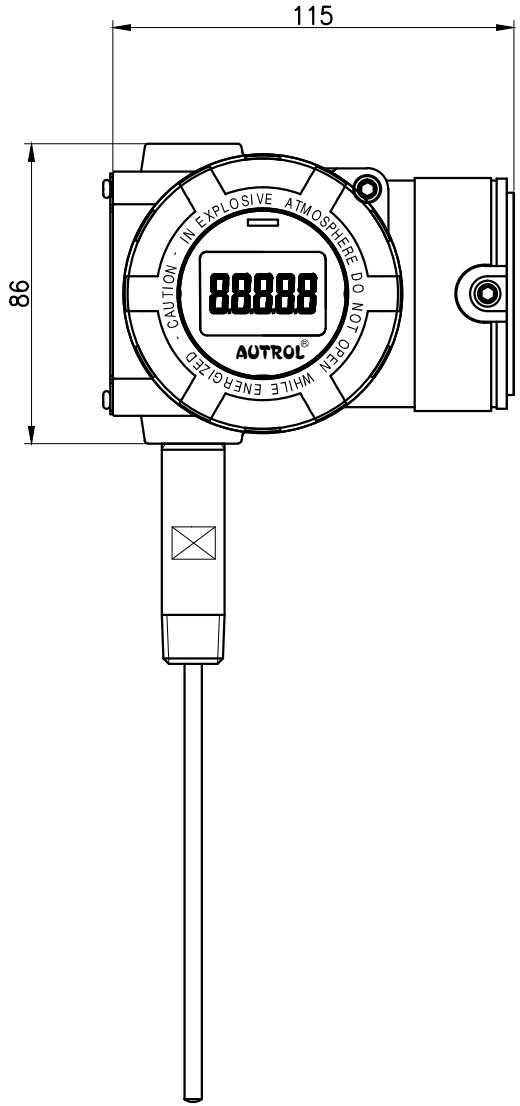

								GENERAL TOLERANCE					
								RANGE	0.5–6	7–30	31–120		
								TOL.	±0.1	±0.2	±0.3		
								RANGE	121–315	316–1000	1001–2000		
Rev.	Description	Dwg.	Date	Chk'd	Date	App'd	Date	TOL.	±0.5	±0.8	± 1		

AUTROL DUON System Co.,Ltd.

TITLE	ATT2100 Horizontal Type			
Size	Scale	DWG No.		Rev.
A3	NS	MD-ASS-2100-HT50		0
Unit	mm	File No.	Sheet	1 of 1