Part No.

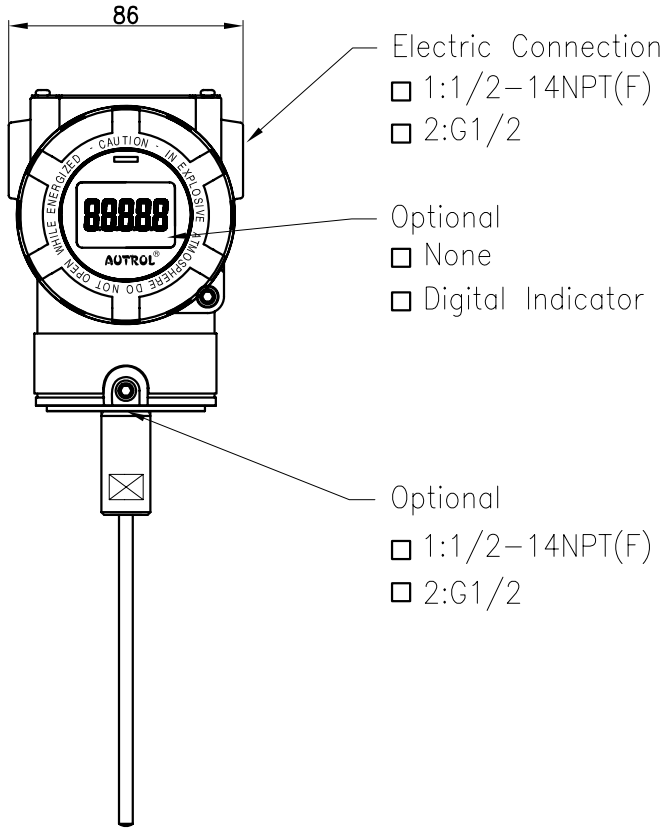

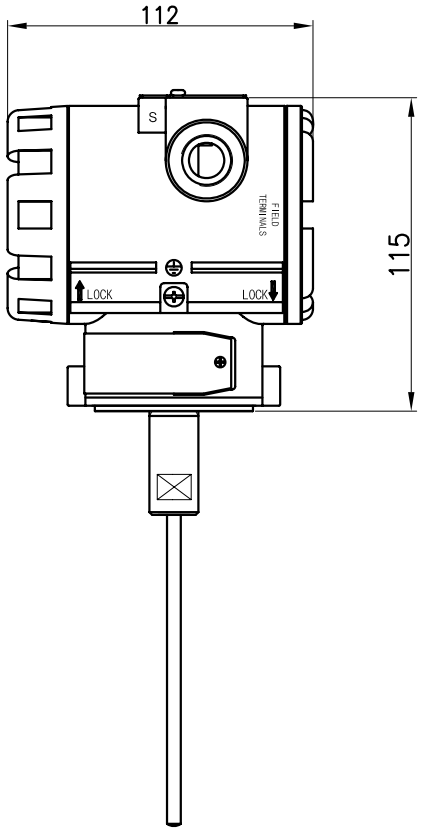

Rev.	Description	Dwg.	Date	Chk'd	Date	App'd	Date

GENERAL TOLERANCE

RANGE	0.5–6	7–30	31–120
TOL.	±0.1	±0.2	±0.3
RANGE	121–315	316–1000	1001–2000
TOL.	±0.5	±0.8	± 1

AUTROL® DUON System Co.,Ltd.

TITLE ATT2100
Outline Dimension
Vertical Type

Size	Scale	DWG No.	Rev.
A3	1:2	MD-ASS-2100-V501	0

Unit	mm	File No.		Sheet	1 of 1